

Performance of the Reference and Timing Systems at SPring-8

Yuji Ohashi
SPring-8

Y.Kawashima
T. Asaka
H.Ego
M.Hara
T.Ohshima
T.Takashima
H.Yonehara

Outline

1. **Introduction**
2. **Tools**
3. **Performances**
4. **New synchronization scheme between 508 and 2856 MHz**
5. **Summary**

1. Introduction

1) SPring-8 accelerator configuration

2) Beam operation mode (over 40 beam filling patterns)

- single-bunch filling
- partially continuous filling

hybrid

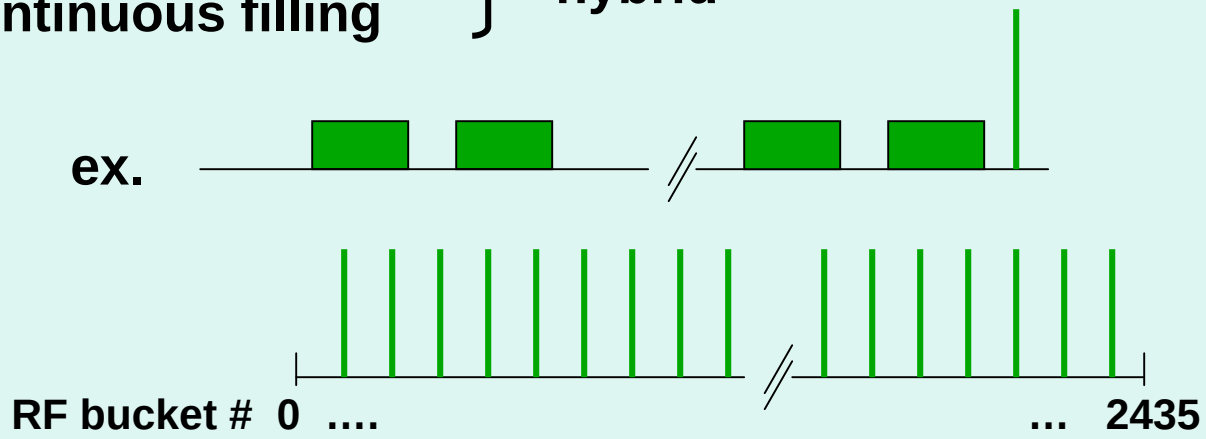

3) History

- 1991~1993 : R&D
- 1994~1996 : Construction
- 1997~ : Commissioning/Beam to users

2. Tools

1) 508 MHz Synchronous Universal Counter (SUC)

- Direct counting of 508 MHz (MC10E136, E016)
- Frequency division: "1/N"
- Timing delay : 30 or 16 bits
- non-stop / single action (revolution counting / injection interval)
- Time jitters: ~ ± 2 ps

2) Reference signal distribution

- PSOF + E/O + O/E + PLL feedback (♦)
- Phase stability: 1°

3) Timing signal distribution

- PSOF + E/O + O/E
- SUC + reference signal: ~ ± 2 ps (relative to reference signal)

(♦) Phase Stabilized Optic Fiber, Electric-to-Optic Transmitter, Optic-to-Electric Receiver, and Phase-lock-loop

3. Performances

1) Relative timing measurement between picosec laser pulse and synchrotron light

- **Streak camera : ~ ± 2 ps**

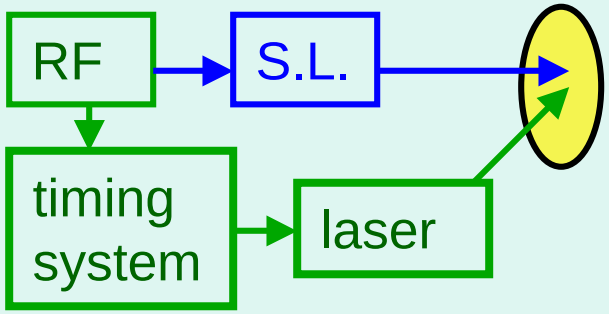

2) Single-bunch beam operation

- **RF knockout system in SY**
- **impurity < 10^{-9}** ($\frac{\text{\# of } e^- \text{ outside of main bunch}}{\text{\# of } e^- \text{ in main bunch}}$; **in SR)**
- **Beam refills during user time**

3) Beam energy correction / earth tide effect

- **Daily circumference change: ~70 μm at max.**
- **Correction step: 0.1 Hz (0.28 μm)**

4. New Synchronization Scheme between 508 and 2856 MHz

[250 ps grid pulse / acceleration of 1 RF bucket in Linac]

- **A common sub-harmonic oscillator: 2 CW RF generation**

↕

- **Linac operation : pulse mode (usually)**

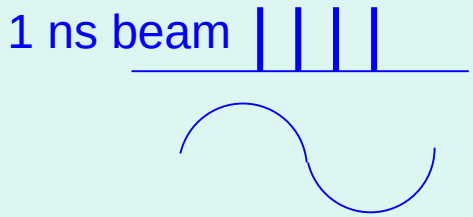

- **Pulse generation of 2856 MHz**
- **Start 2856 MHz generation by 508 MHz RF timing**
- **"508 MHz SUC + Arbitrary waveform generator + Bandpass filter + Frequency multiplier"**

↓

- **2855.981281 MHz (duration: ~290 μs)**

5. Summary

1) R & D

- **508 MHz Synchronous Universal Counter**
- **Reference signal distribution by "PSOF+E/O+O/E+PLL": 1°**
- **Timing signal distribution with 508 MHz synchronization: ~ ± 2 ps**

2) Providing precision timing for beam injection, beam monitoring, and experiments: ~ ± 2 ps

3) Synchronization between 508 and 2856 MHz RF's (arbitrary)

- **A beam in one RF bucket is injected into SY from Linac**
- **Require only one master synthesizer of 508 MHz**

Ref.)

1) H. Suzuki *et al*., Nucl. Ins. Meth. A 431, 294-305 (1999),
" 508 MHz synchronous universal counter for beam control system of Spring-8"
2) Y.Kawashima *et al*., Phys. Rev. ST Ace. Beams Vol.4, 082001, 1-5 (2001),
" New synchronization method of arbitrary different radio frequencies …"

Electronics setup

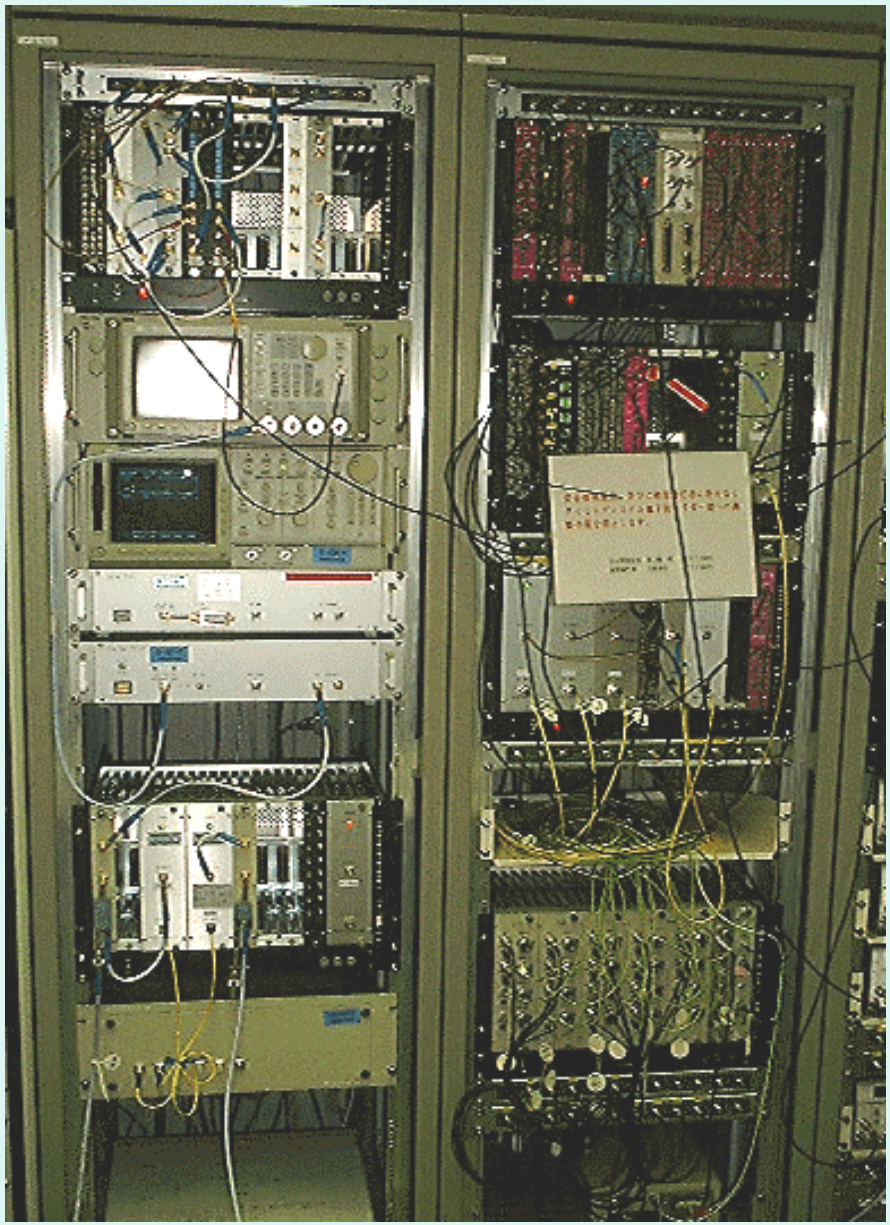

new 2856 MHz system

Linac e-gun trigger

optic signal to e-gun

Configuration of SPring-8 Accelerators

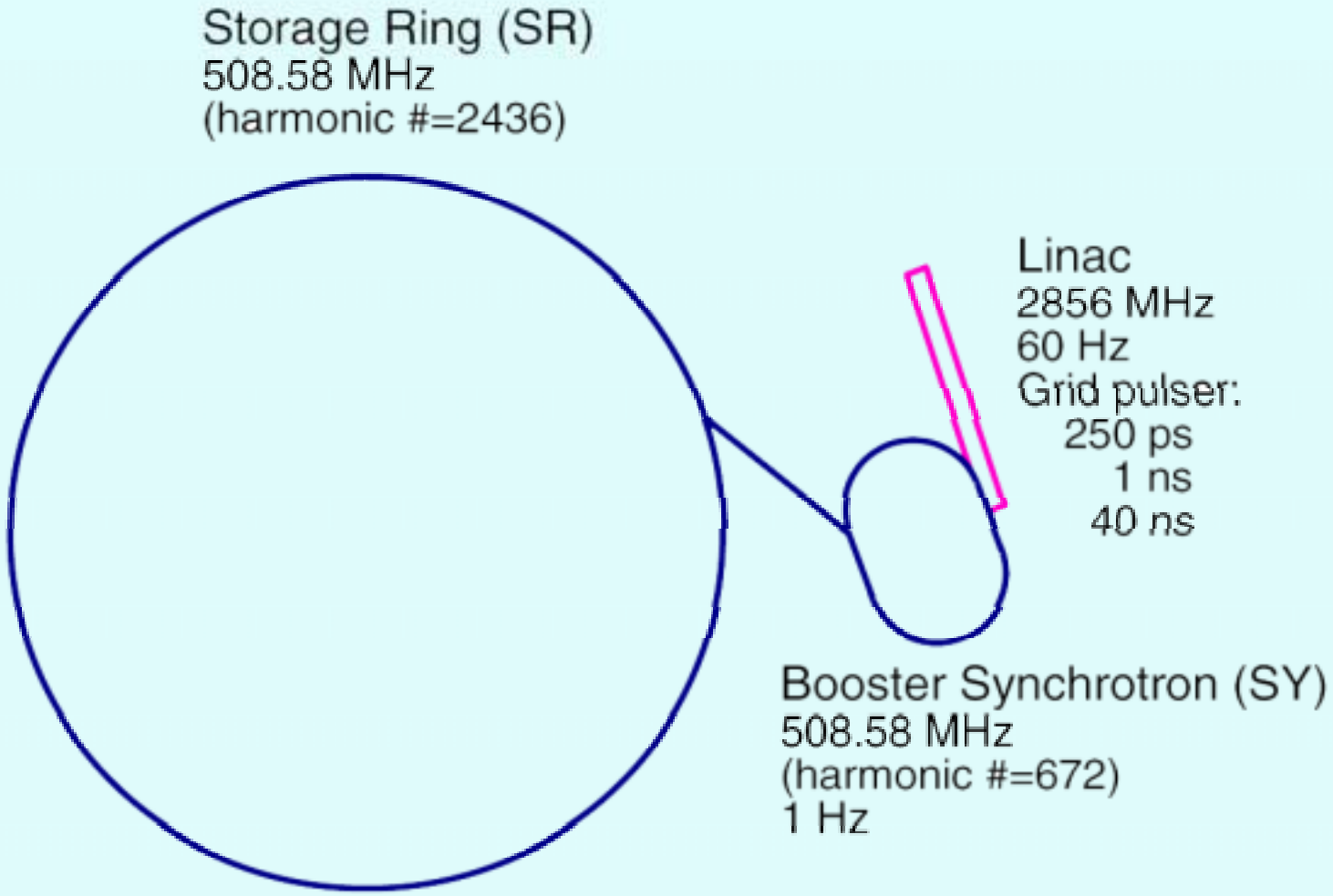

Harmonic number ratio= 29 : 8

Block Diagram of SUC

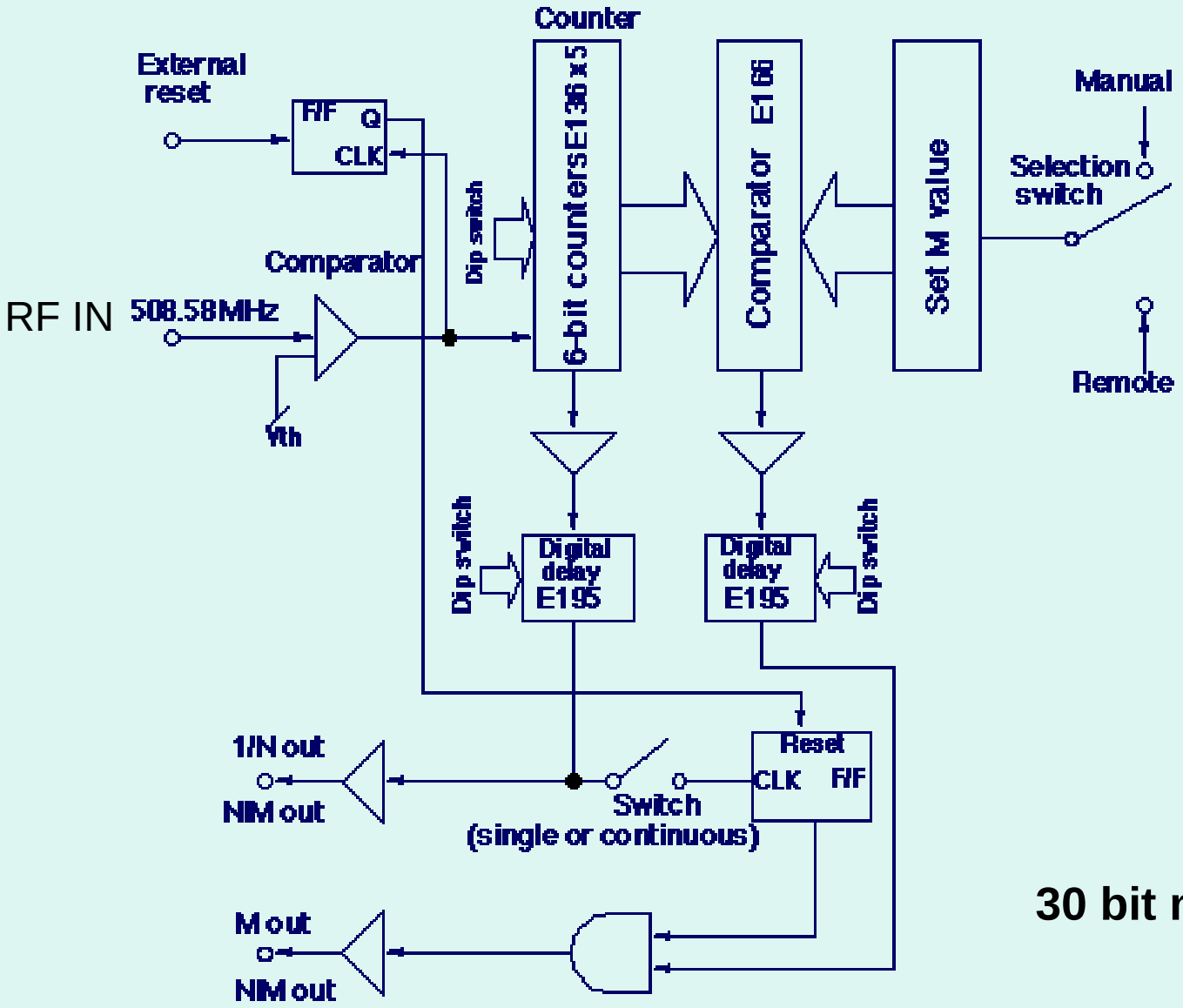

30 bit model

508 MHz Synchronous Universal Counter

30 (or 16)
bit model

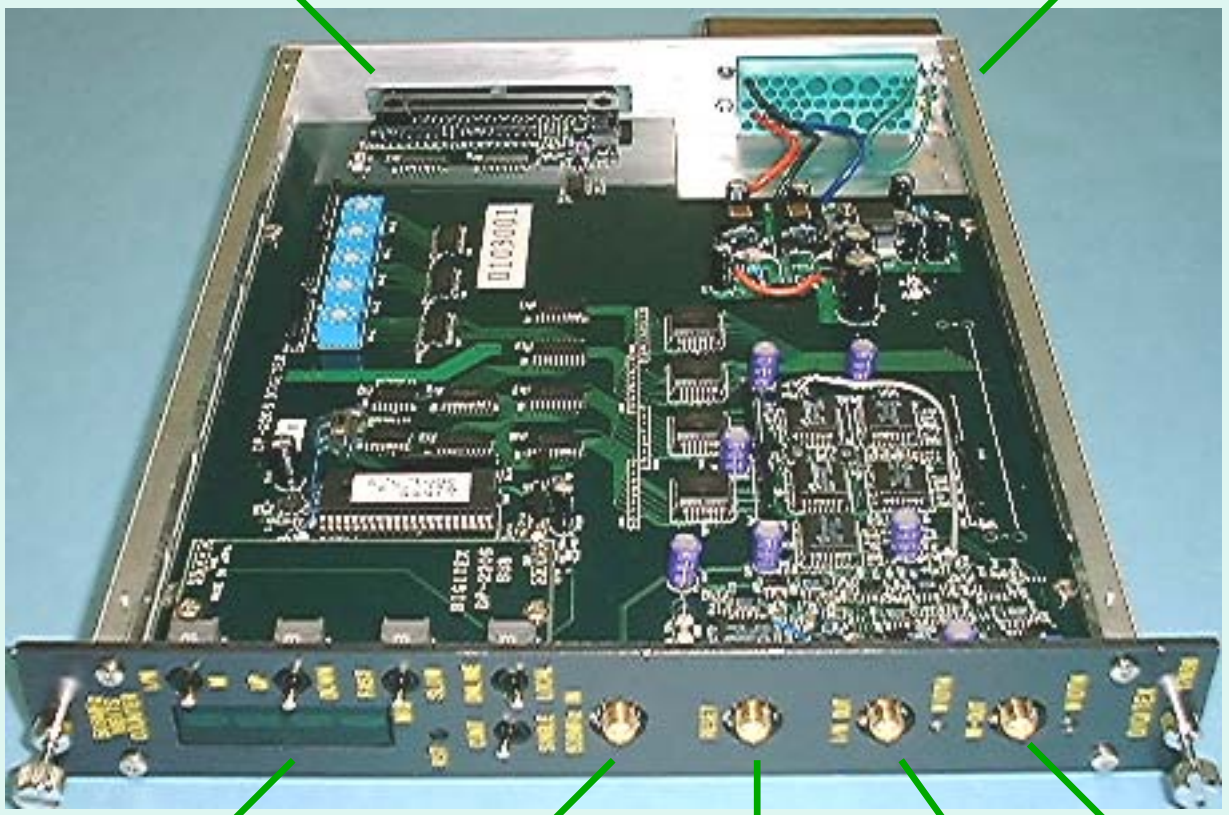

N=“harmonic number - 1”, M=0, 1, ……, N-1, N

Frequency range: 480 ~ 520 MHz (adjustable below 480 MHz)

Time Jitter Measurement

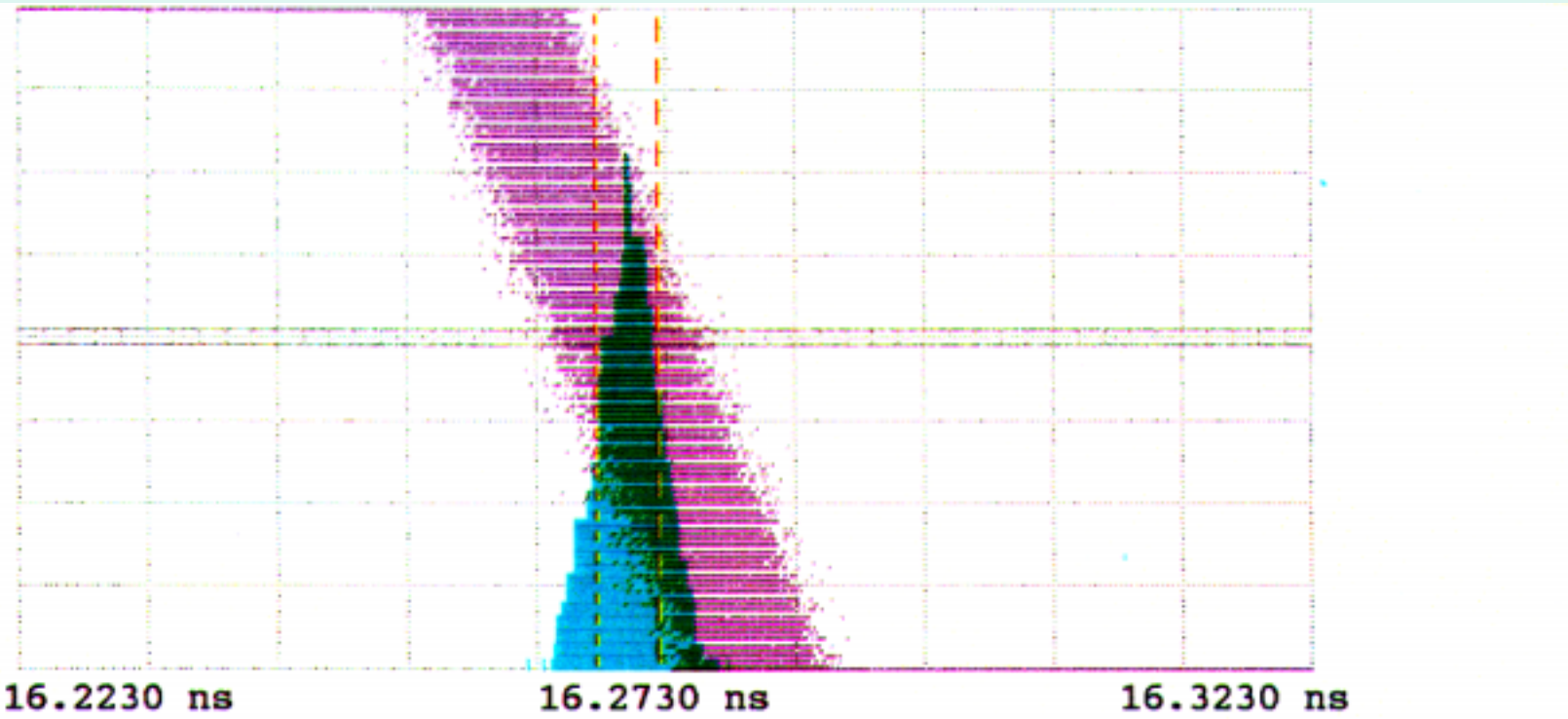

Phase-Stabilized Optic Fiber

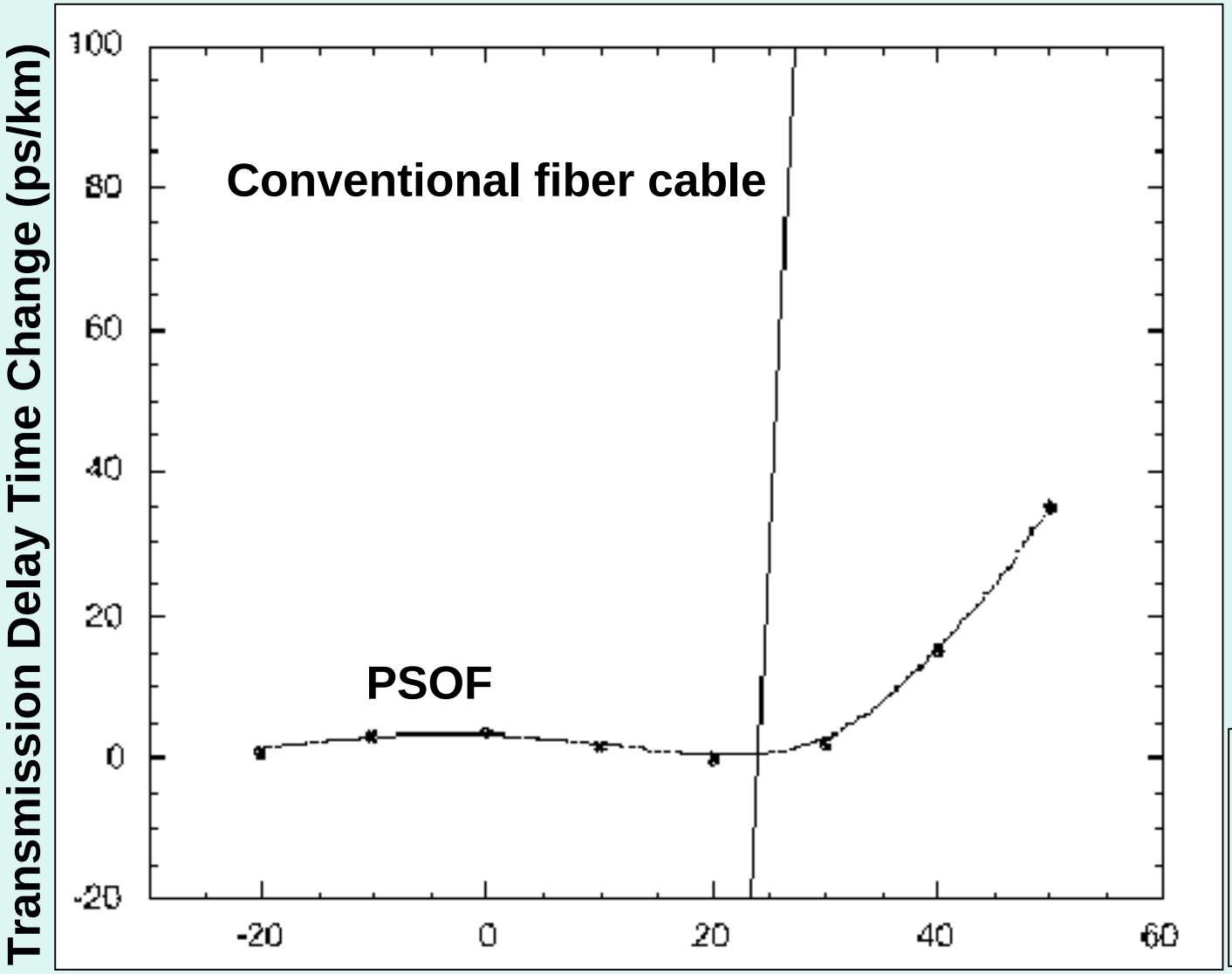

+ phase stable E/O & O/E

Ref.) J. Urakawa, Particle Accelerators, 1990, Vol.29, pp.251-256

Reference Signal Distribution in SR

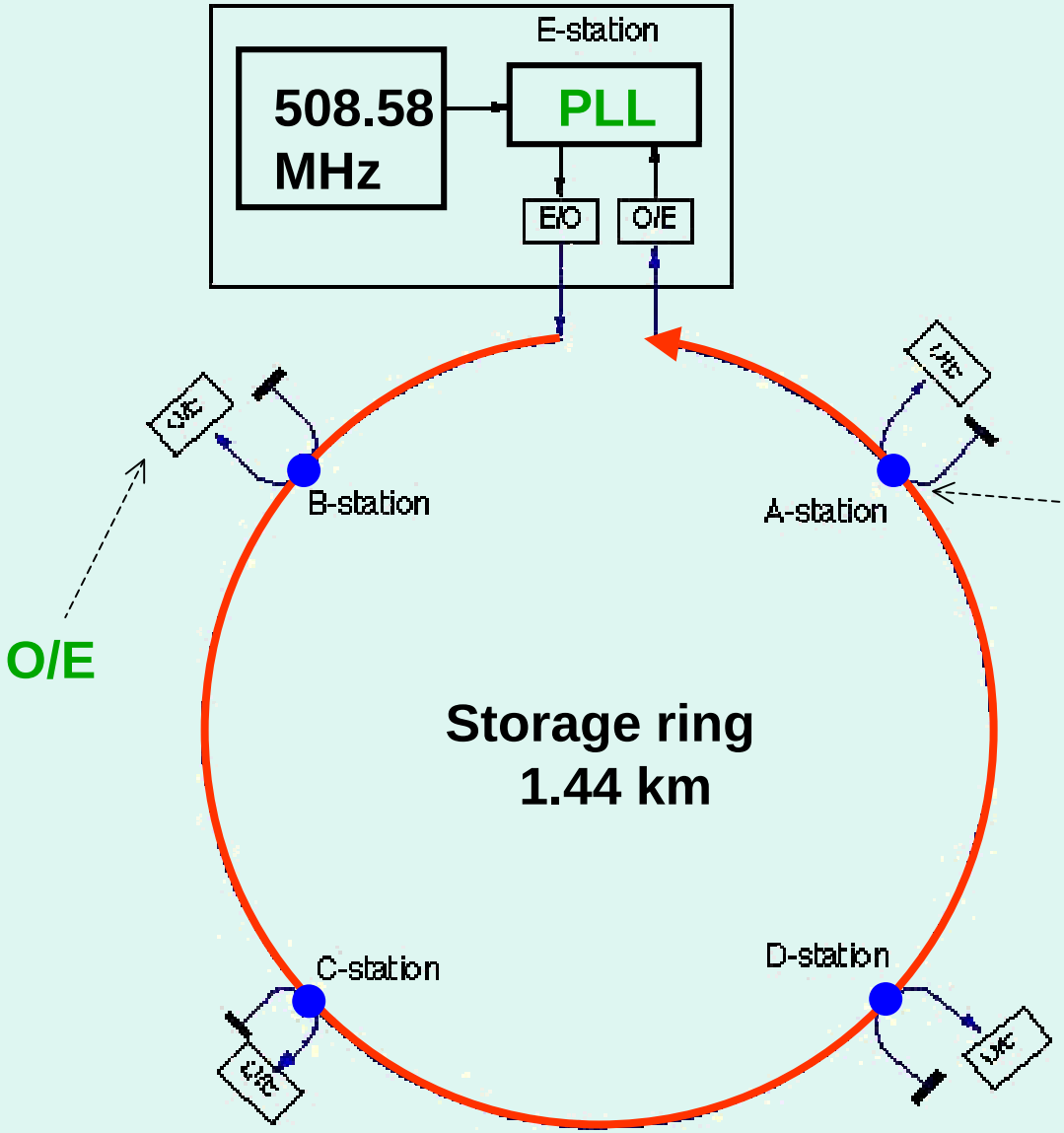

(air-conditioned: 25±1 °C)

Optic directional coupler

PSOF (~1700m)
+ E/O & O/E
+ PLL

Reference Signal Distribution to SY

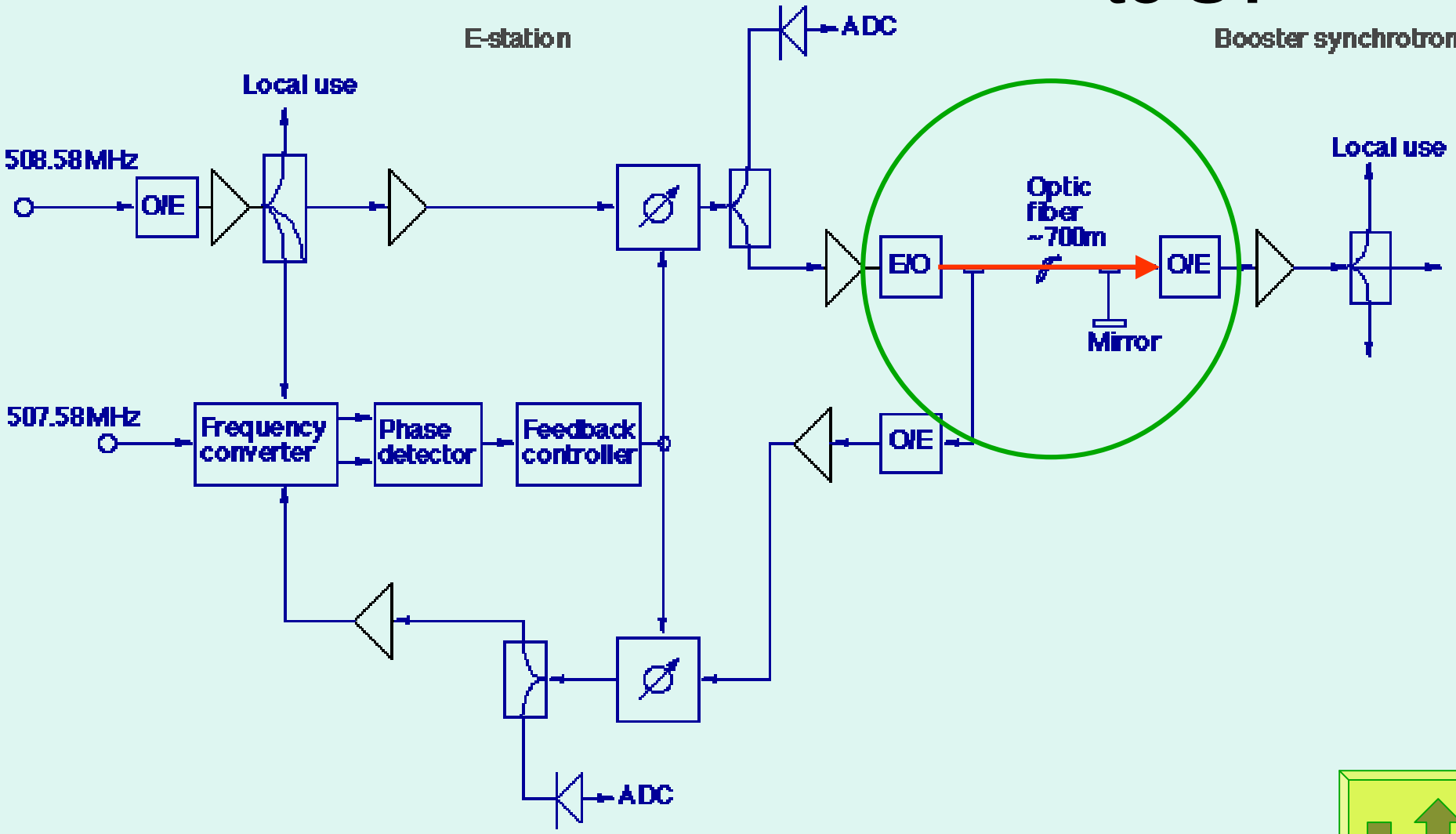

Ref.) E. Peschardt and J.P.H. Sladen, IEEE, 1989, pp. 1960-1962

Timing Signal Distribution

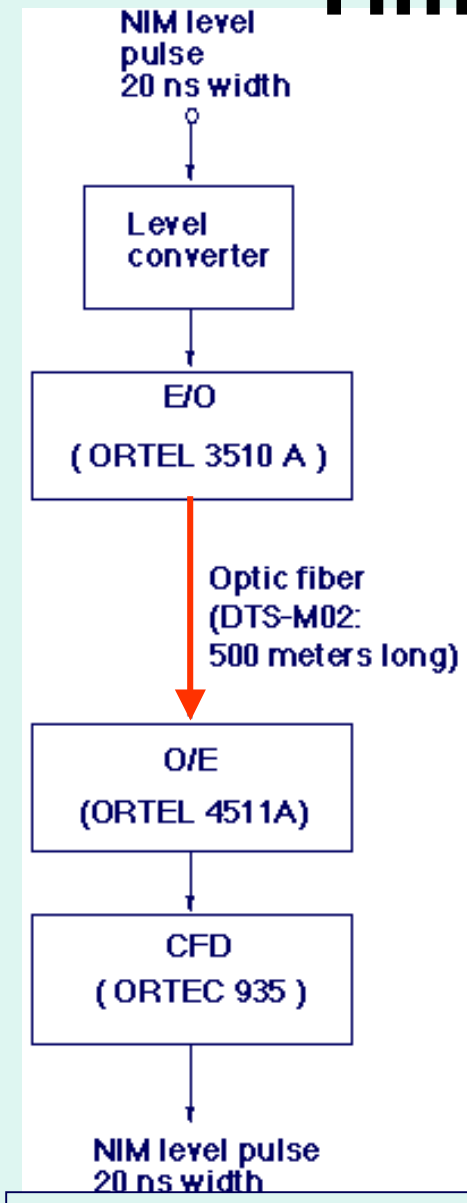

w/o synchronization

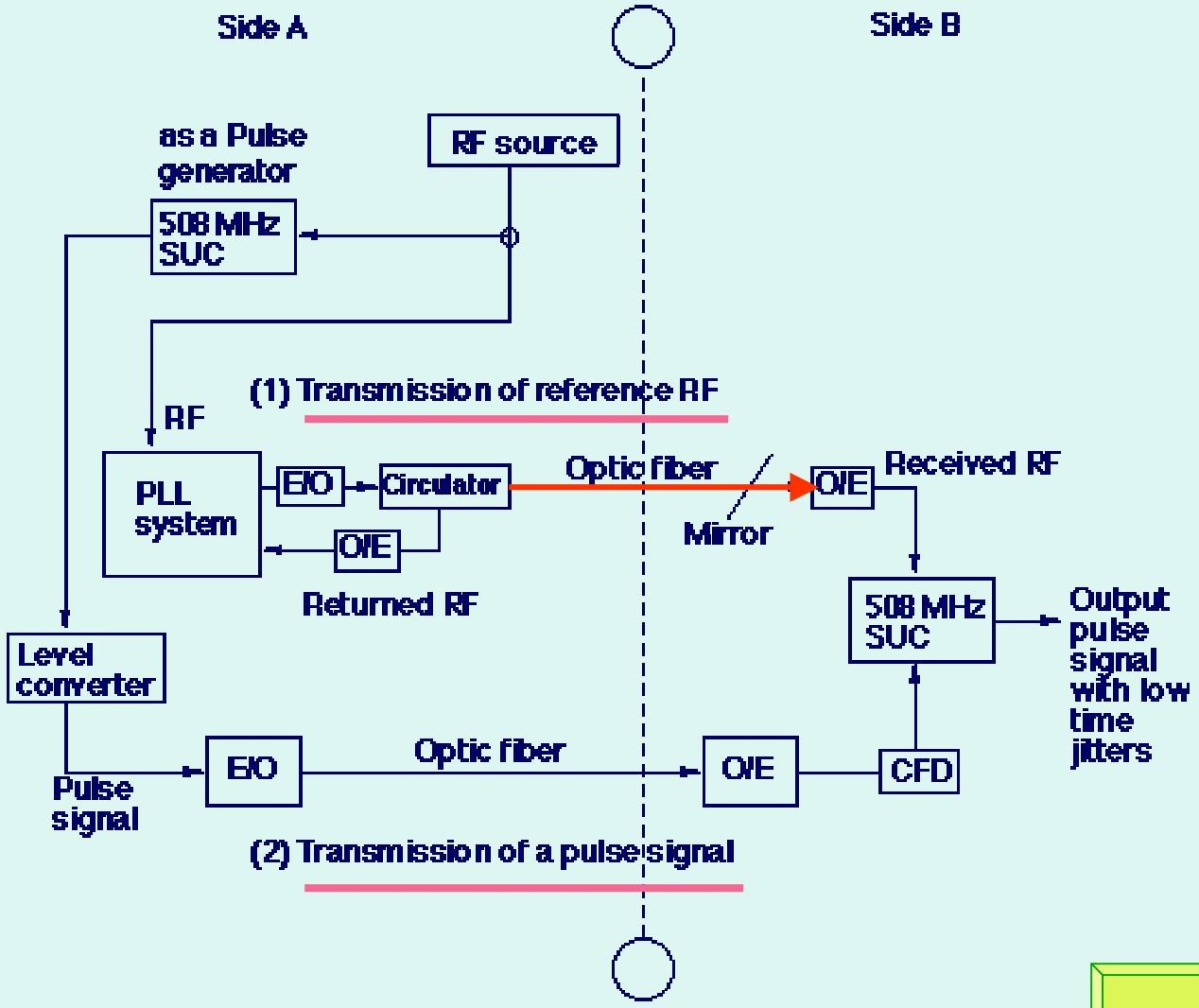

w/ synchronization

Time jitter measurement at electron gun

σ =7.4 ps

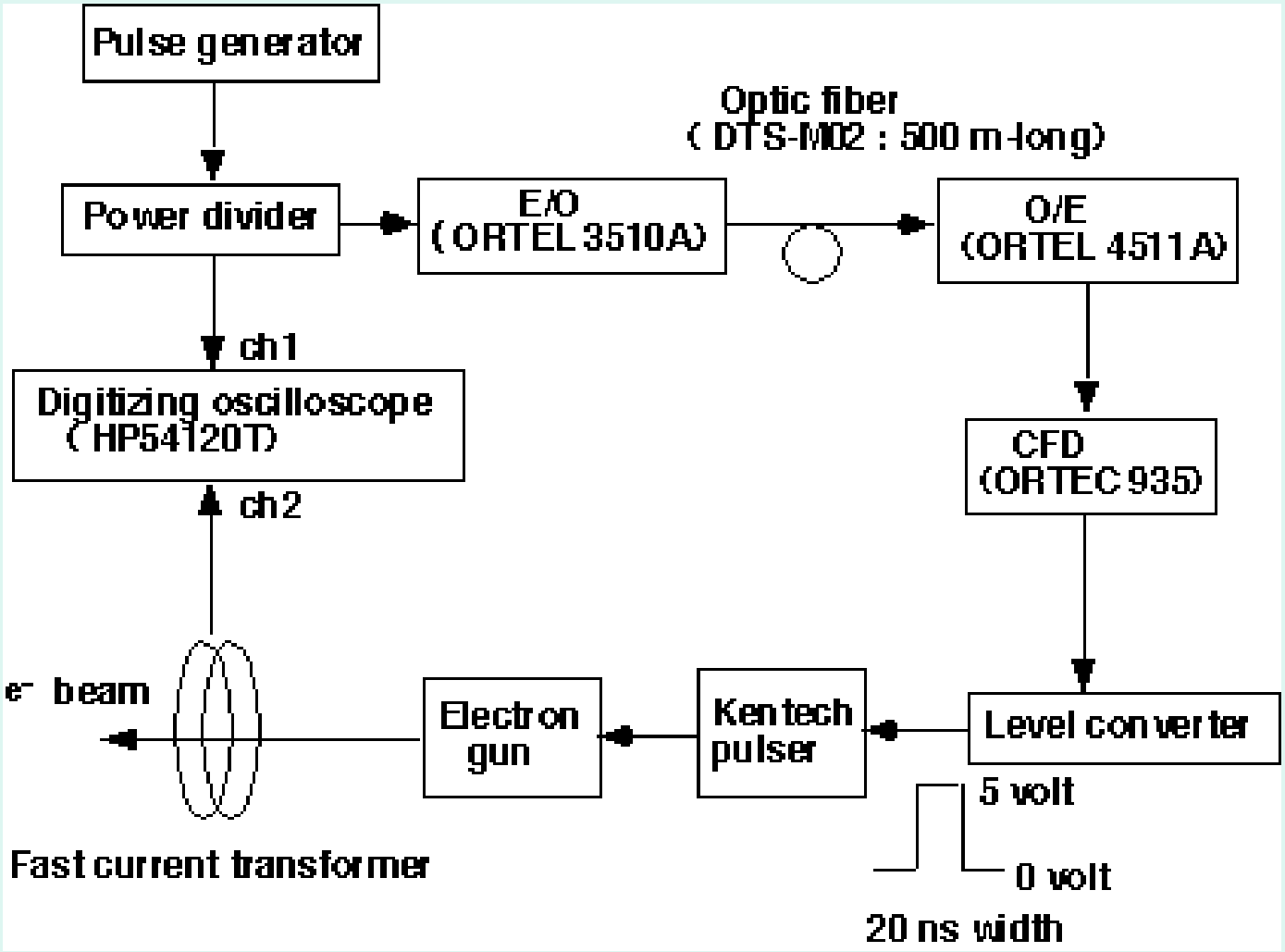

Relative timing between pulsed laser and synchrotron light

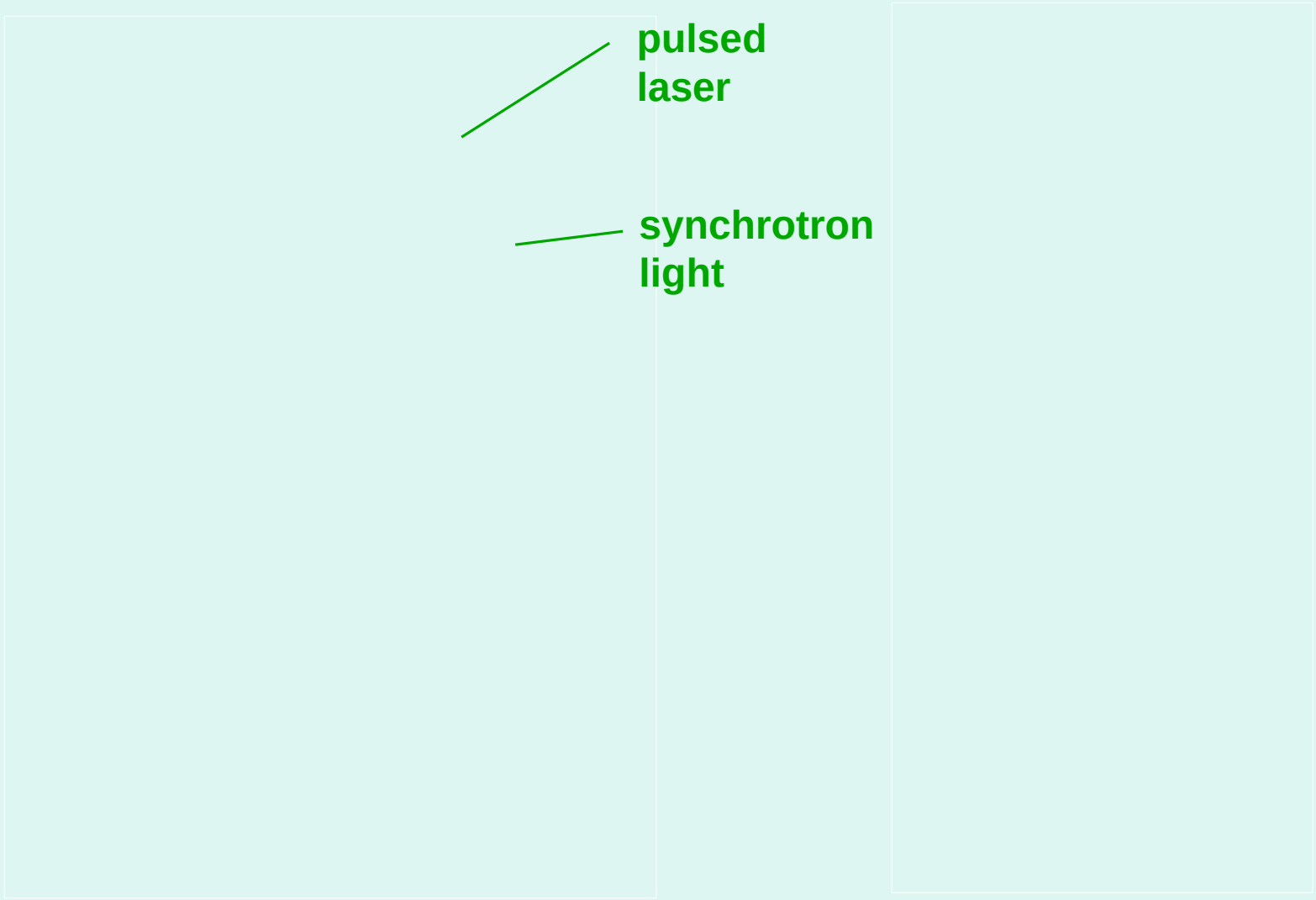

Single-bunch beam

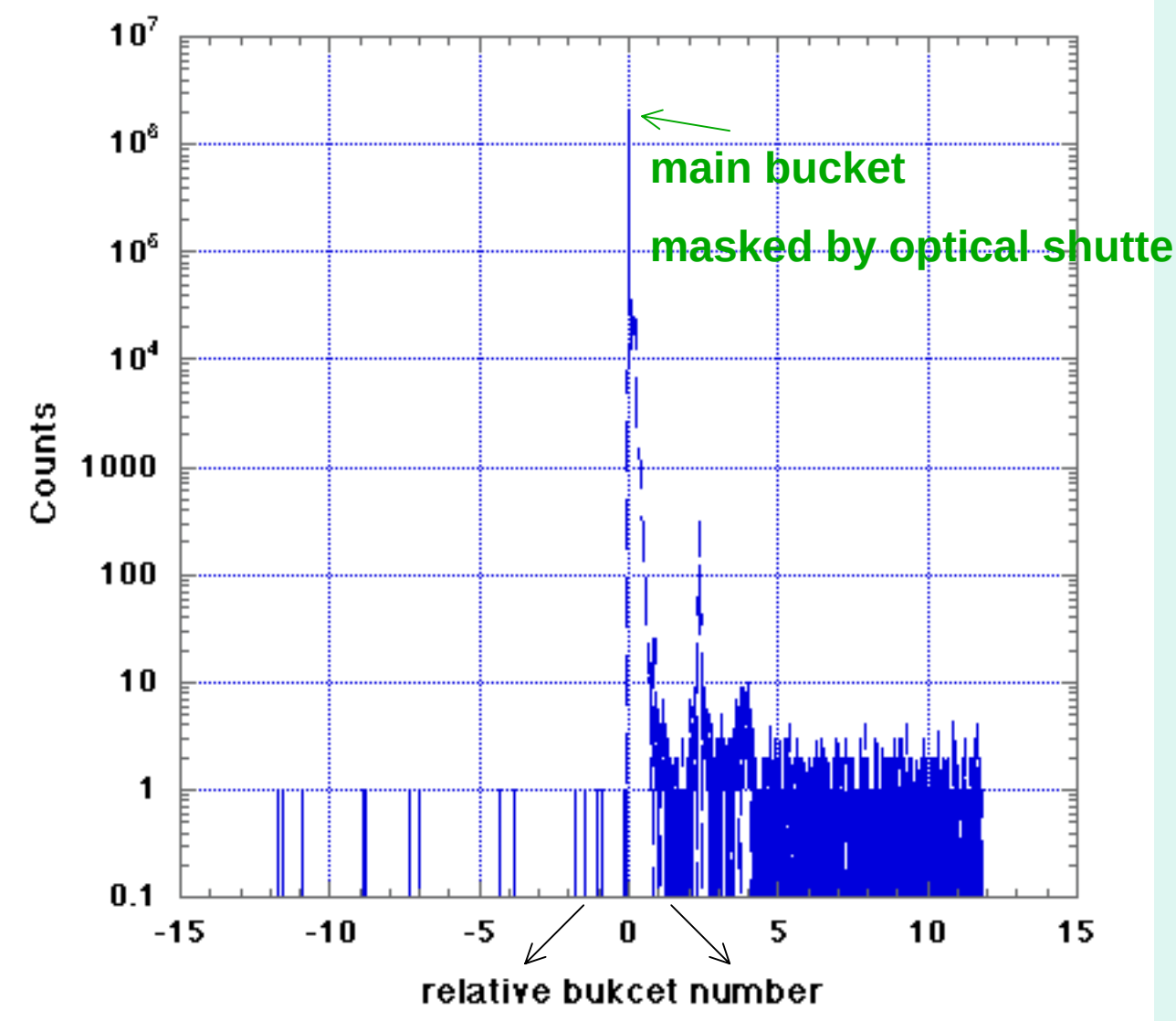

Single-bunch beam (3 buckets)

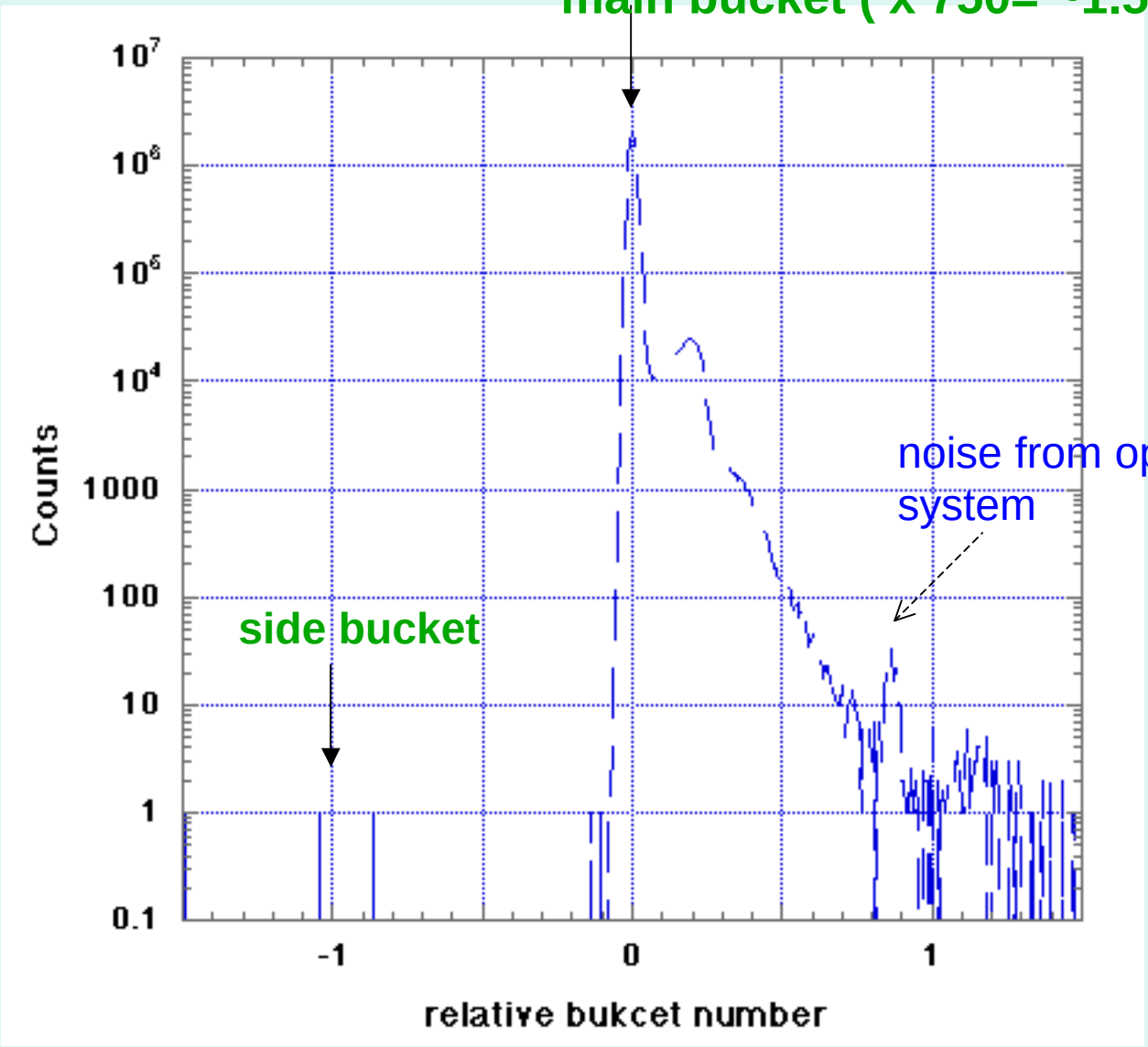

Beam energy correction / earth tide effect

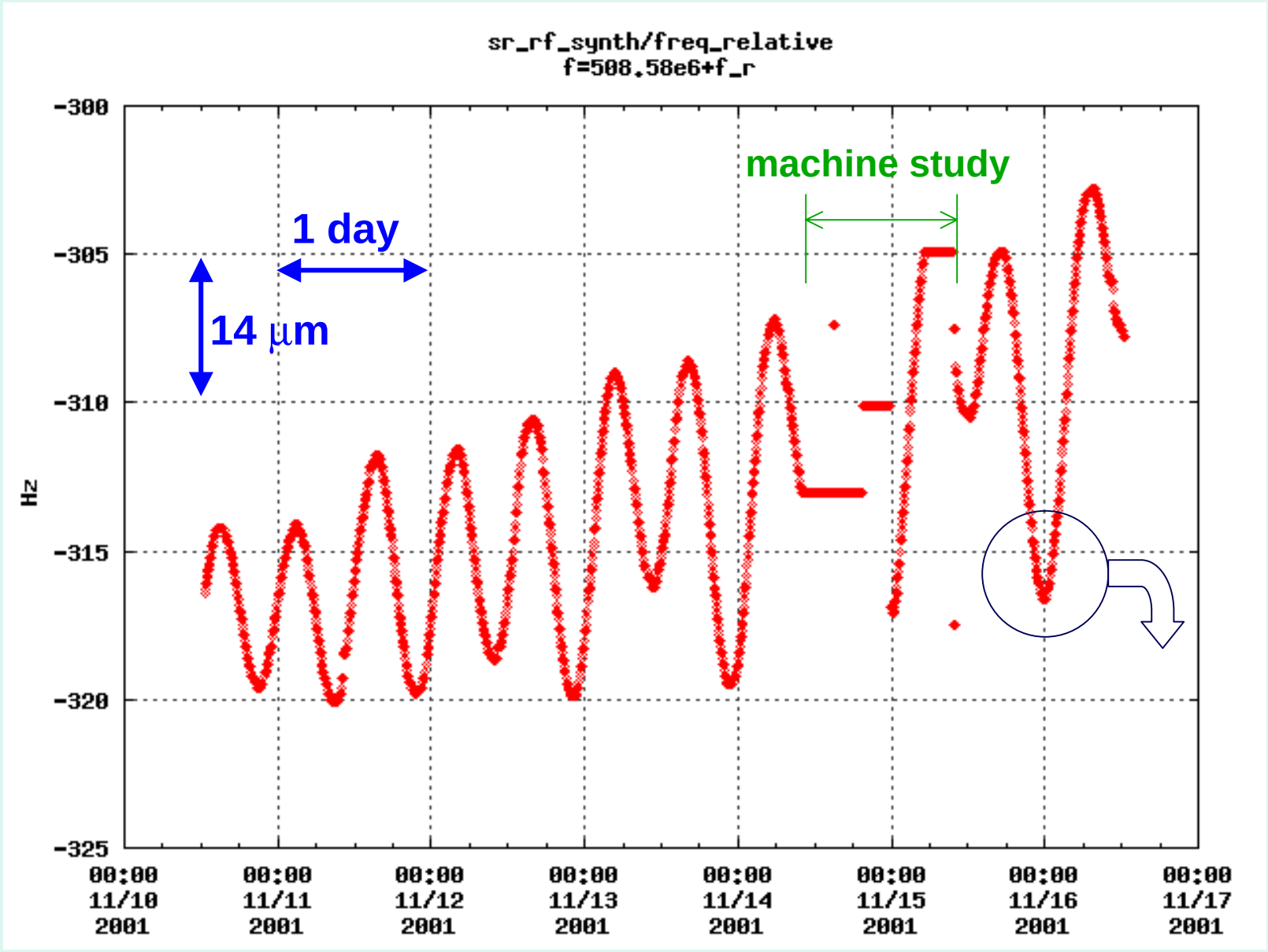

Beam energy correction -2

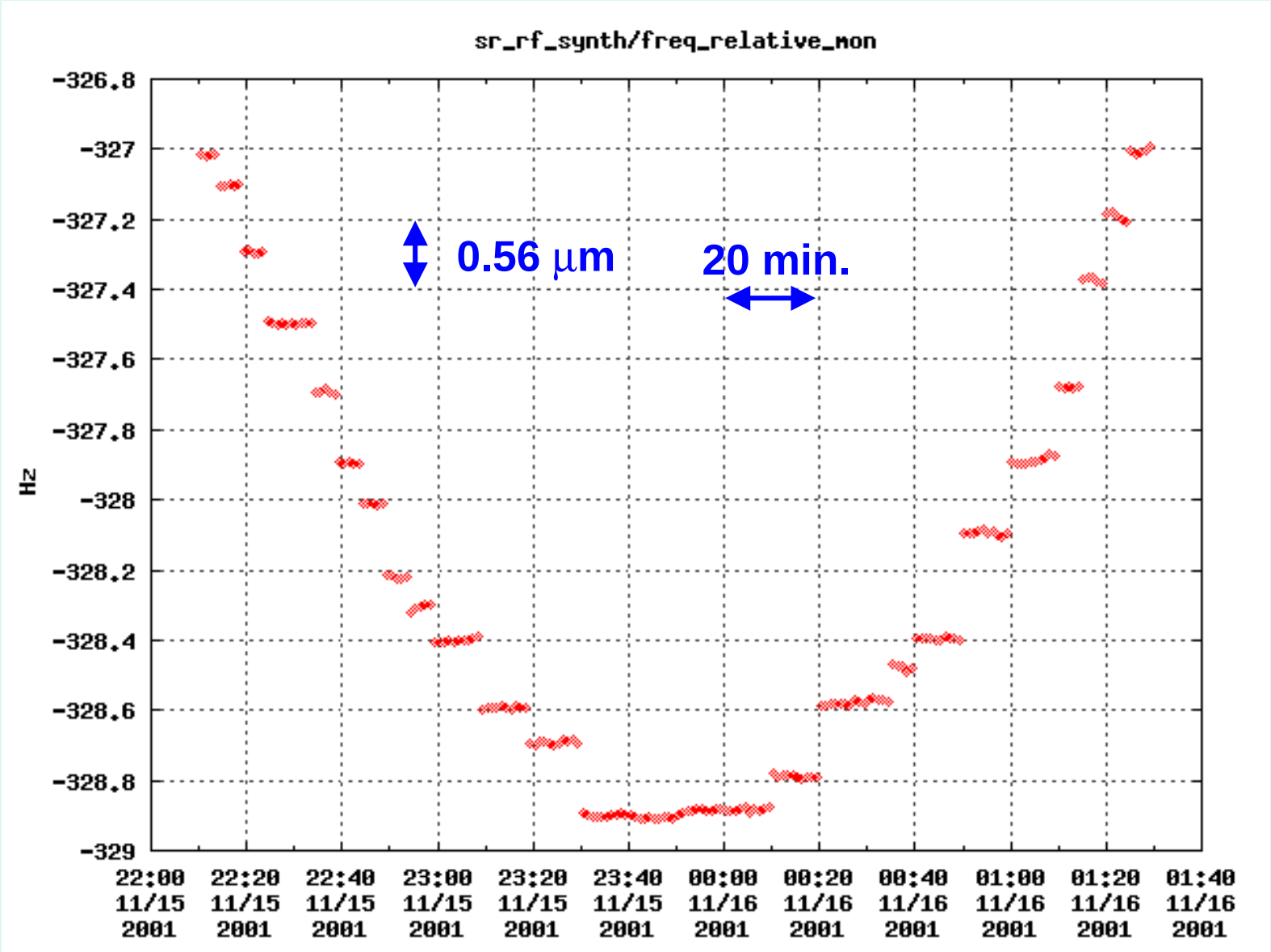

Frequency correction by GPS-based frequency counter

GPS-based frequency counter

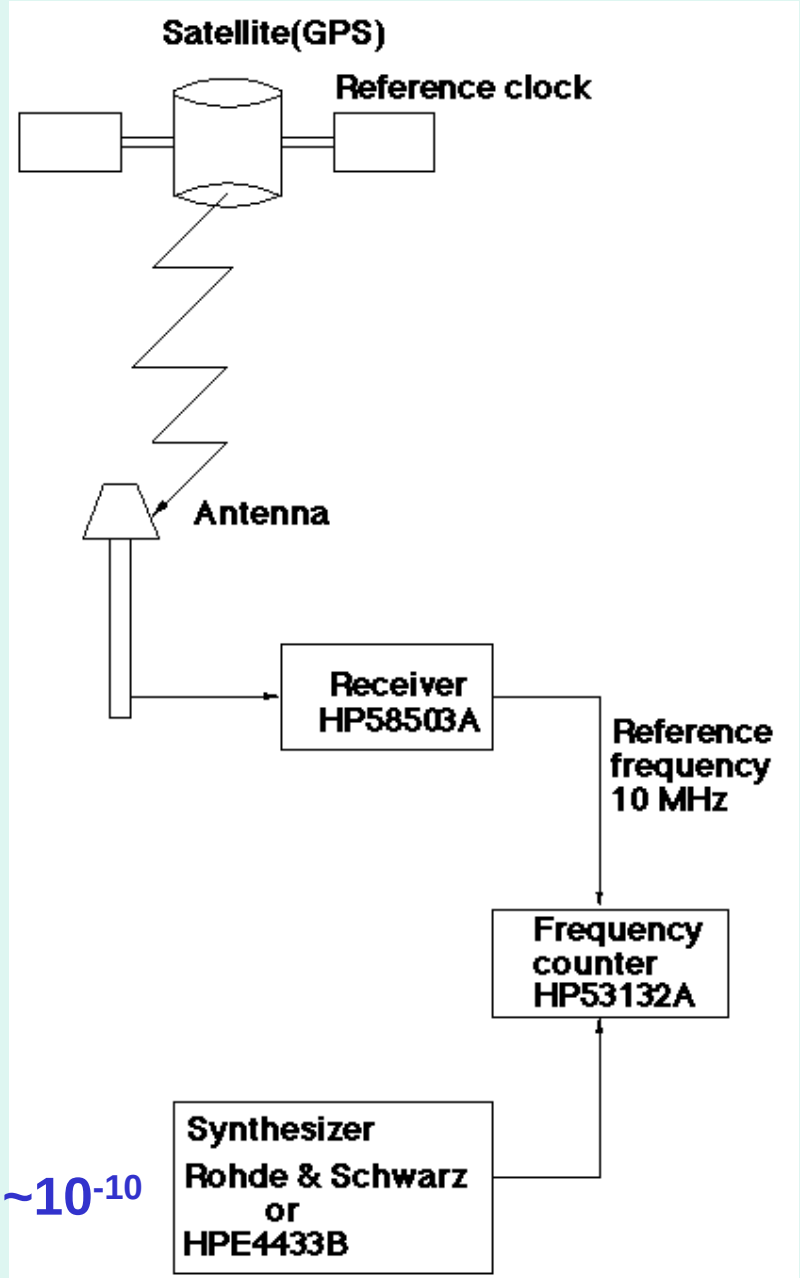

long term stability: ~10^{-10}

Effect of earth tide

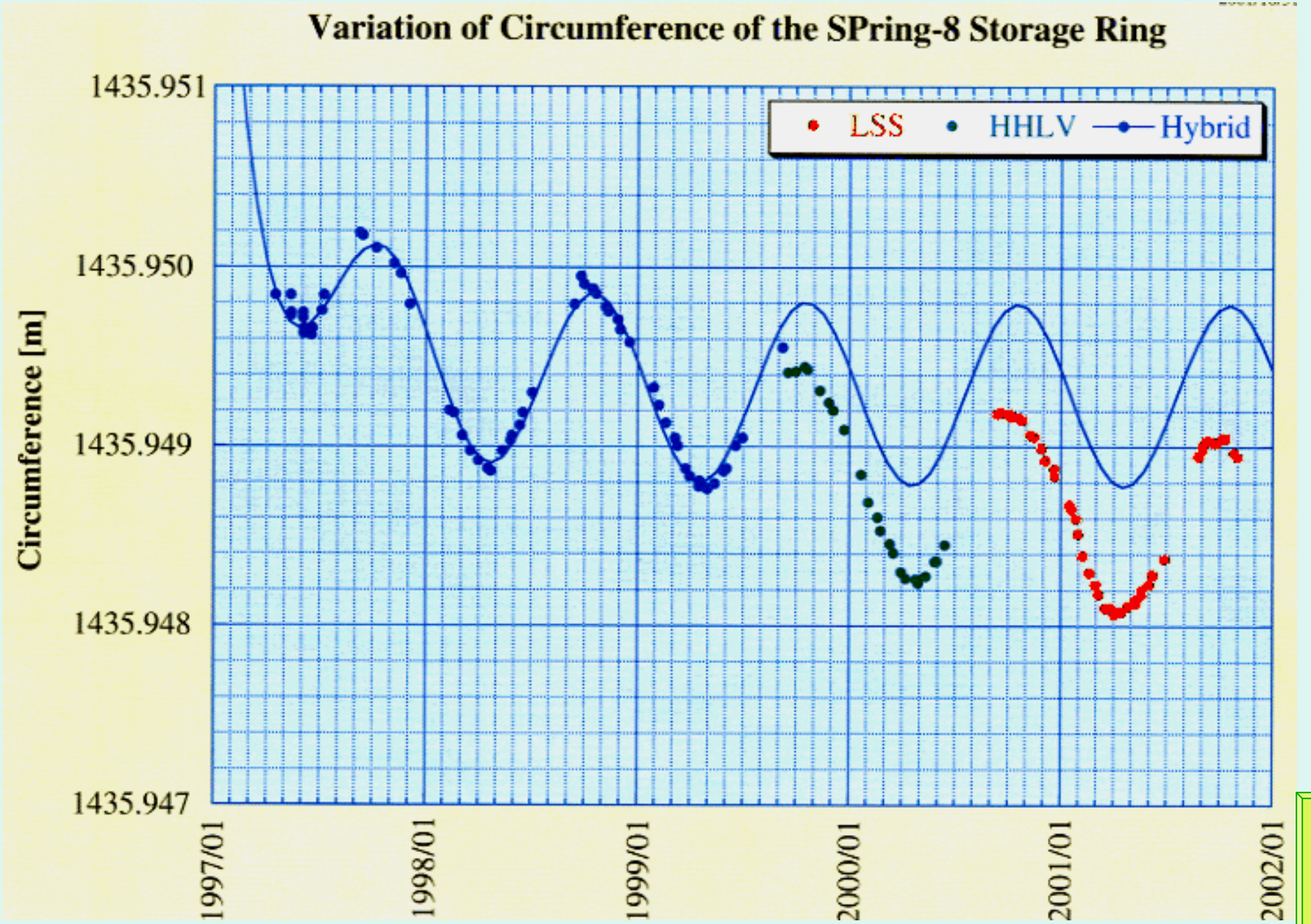

Block diagram of 2856 MHz generation

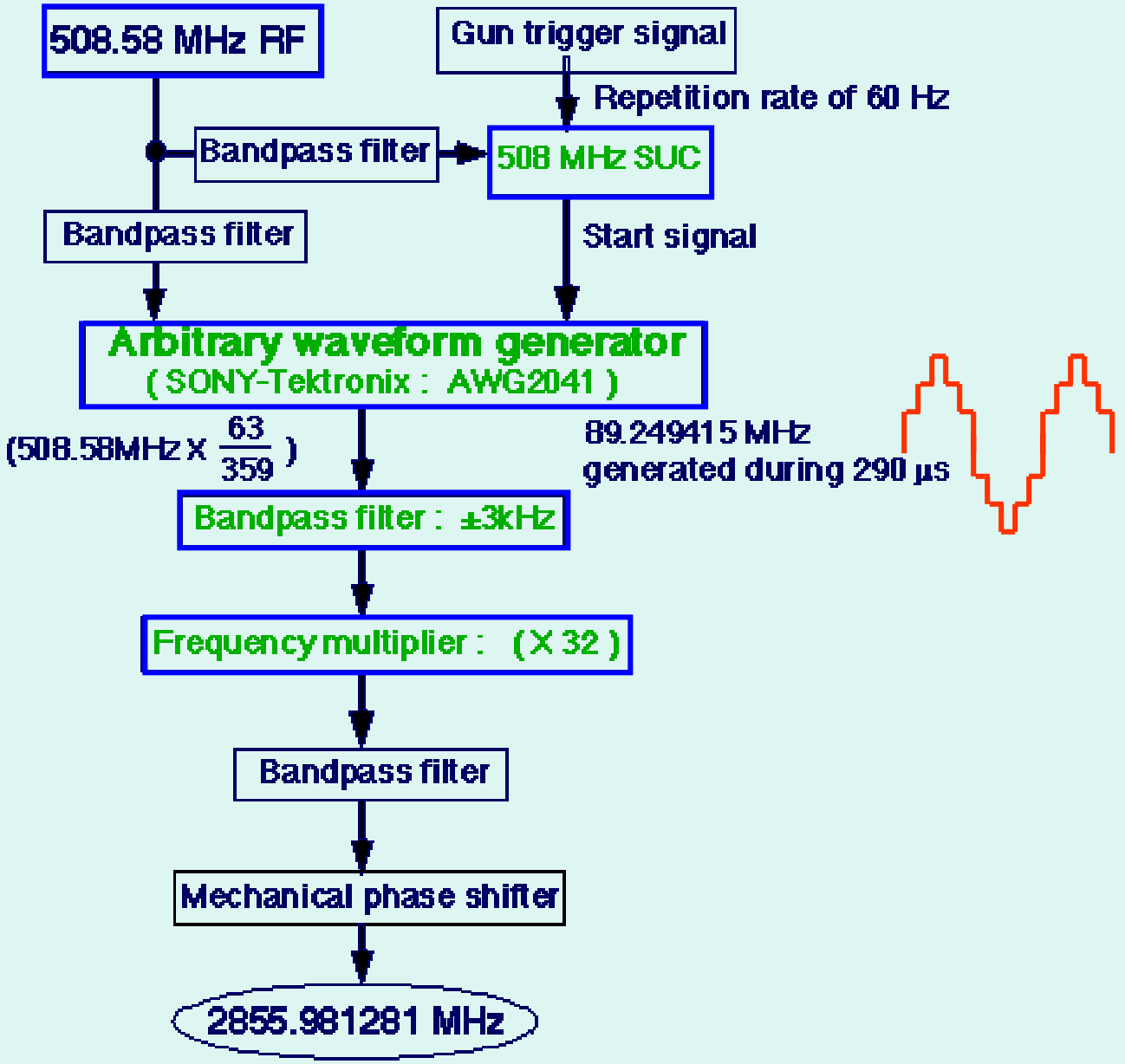

Timing chart

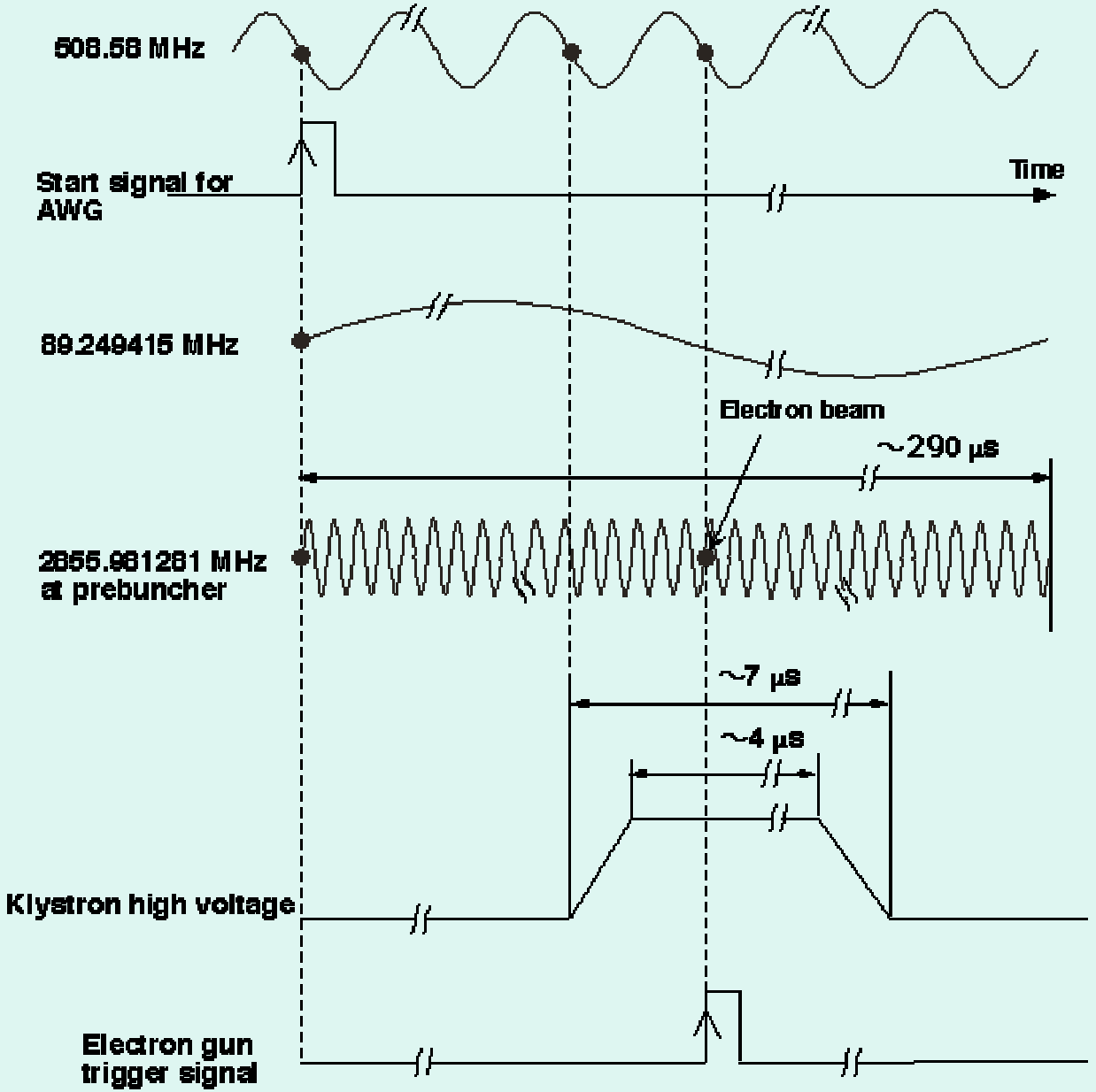

Spectra of 2856 MHz RF

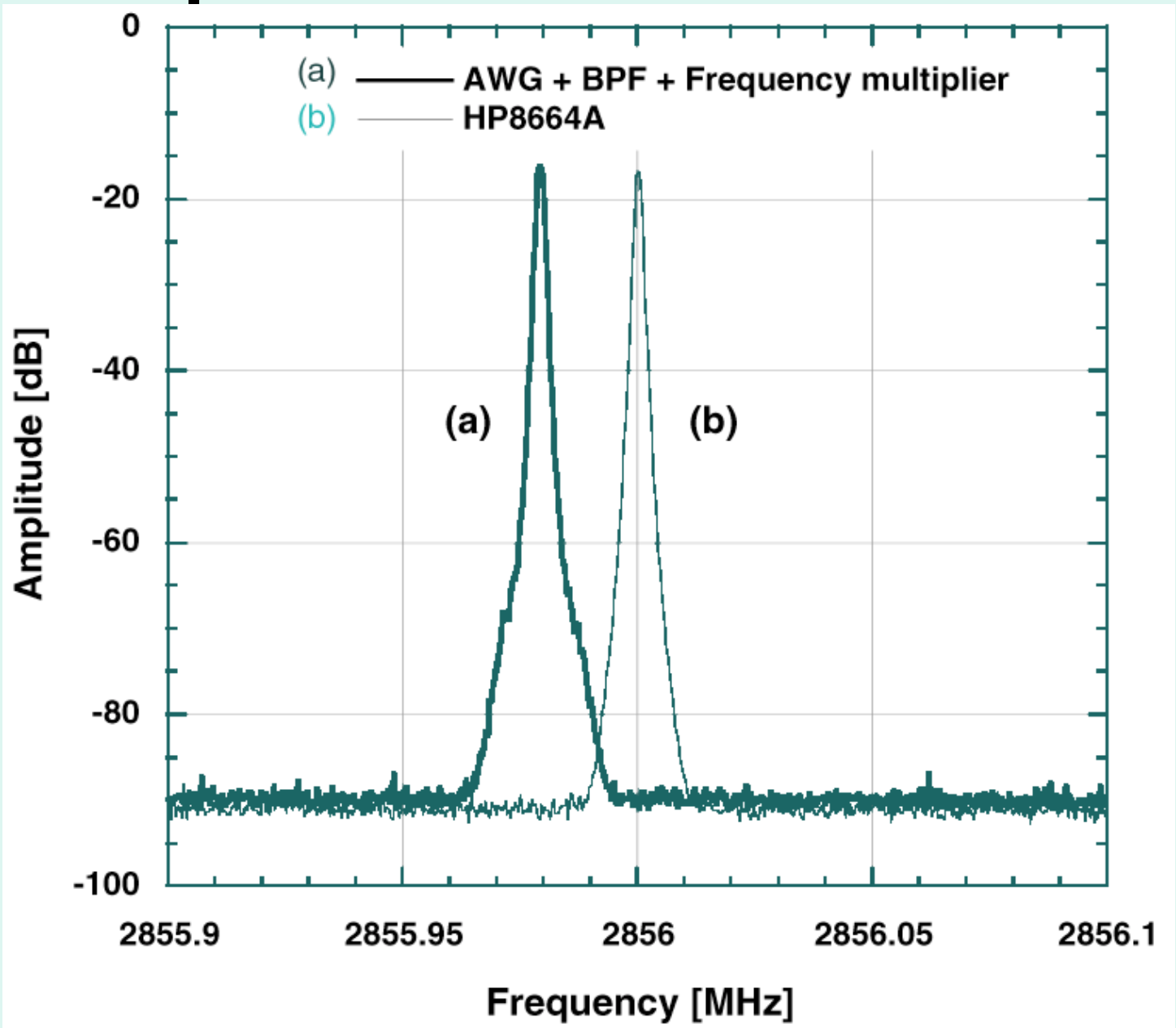

New Linac RF system

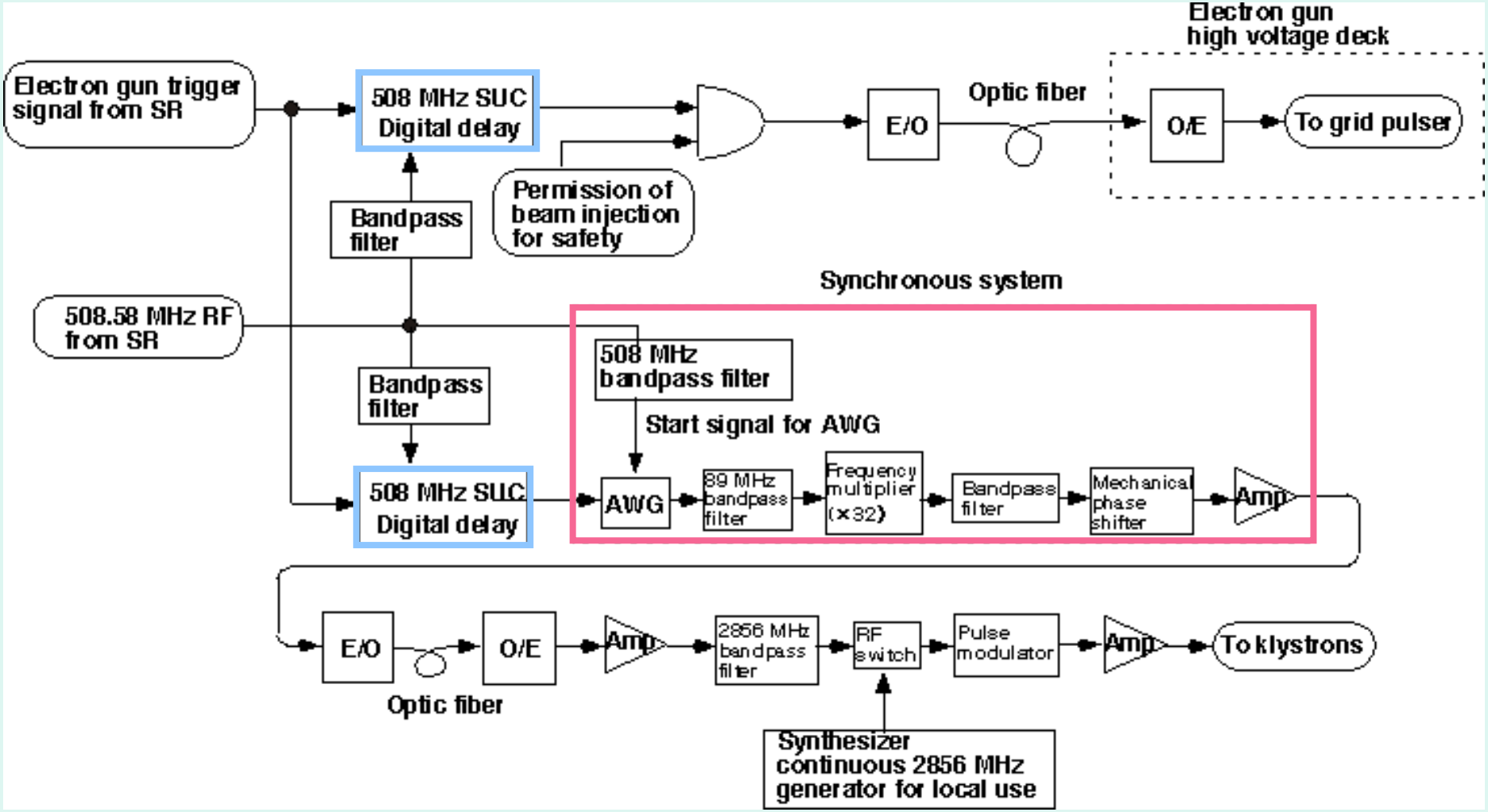

Modules

- **Jitter reduction of pulse signal**

  EG&G ORTEC: # 935

  “Quad 200-MHz Constant-Fraction Discriminator”

- **Phillips Scientific**

  Logic Unit: #754, 755, … (up to 300 MHz)

  Discriminator: #704, 708, … (up to 300 MHz)

  Amplifier: #774, 775 (0.1 MHz ~ 1.8/1.5 GHz)

- **Level Translator**
- **Gate and Delay Generator**

  (60 Hz Synchronizer, Fast Level Converter, …)

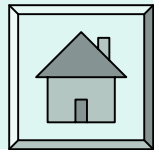

New 2856 MHz system

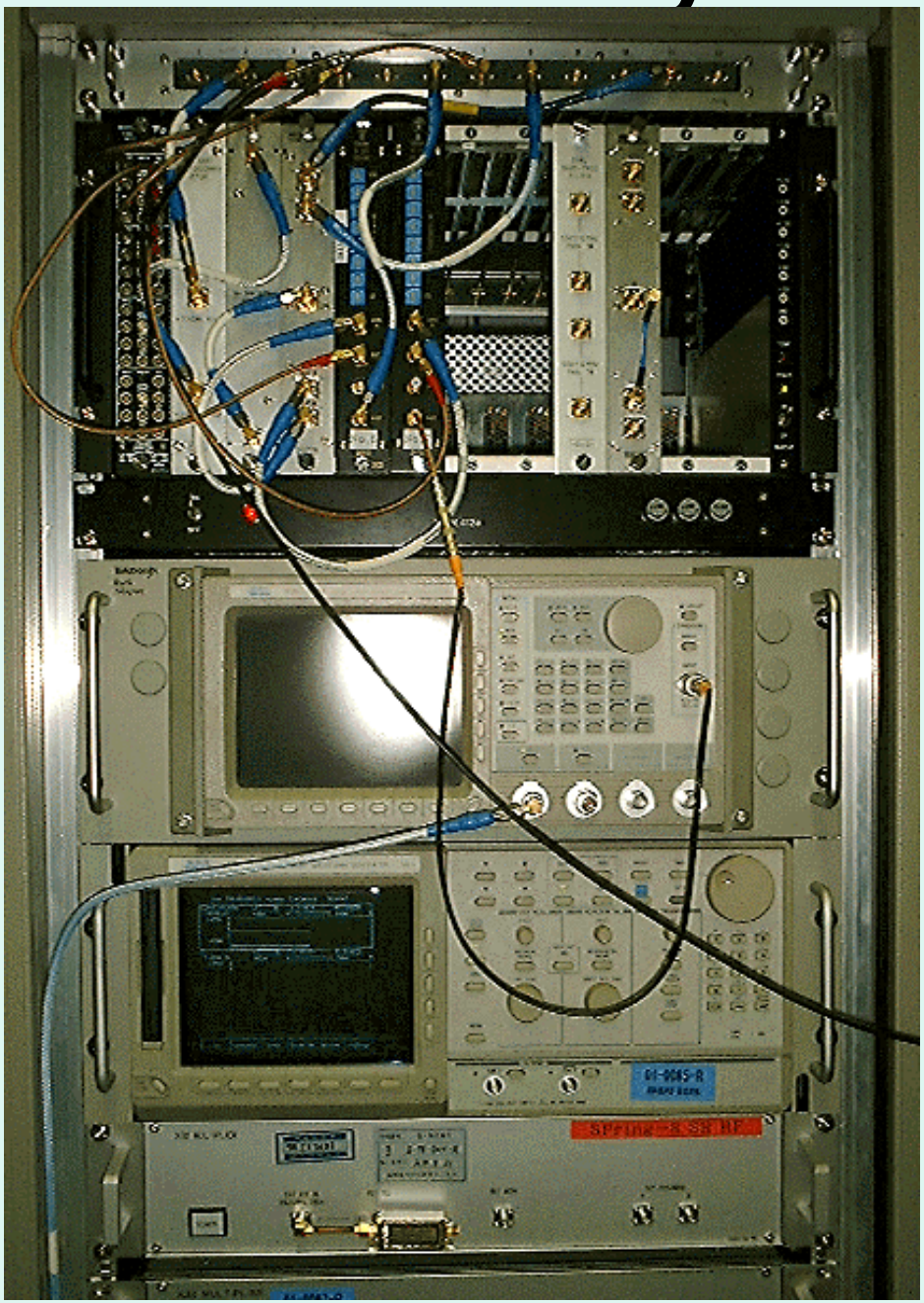

Arbitrary Waveform Generator →

Frequency multiplier (x32) →

AWG



SONY-Tektronix : AWG2041

E/O , O/E



Ortel Co.
E/O: 3510A
O/E: 4511A

patch pannel

Electron gun trigger system

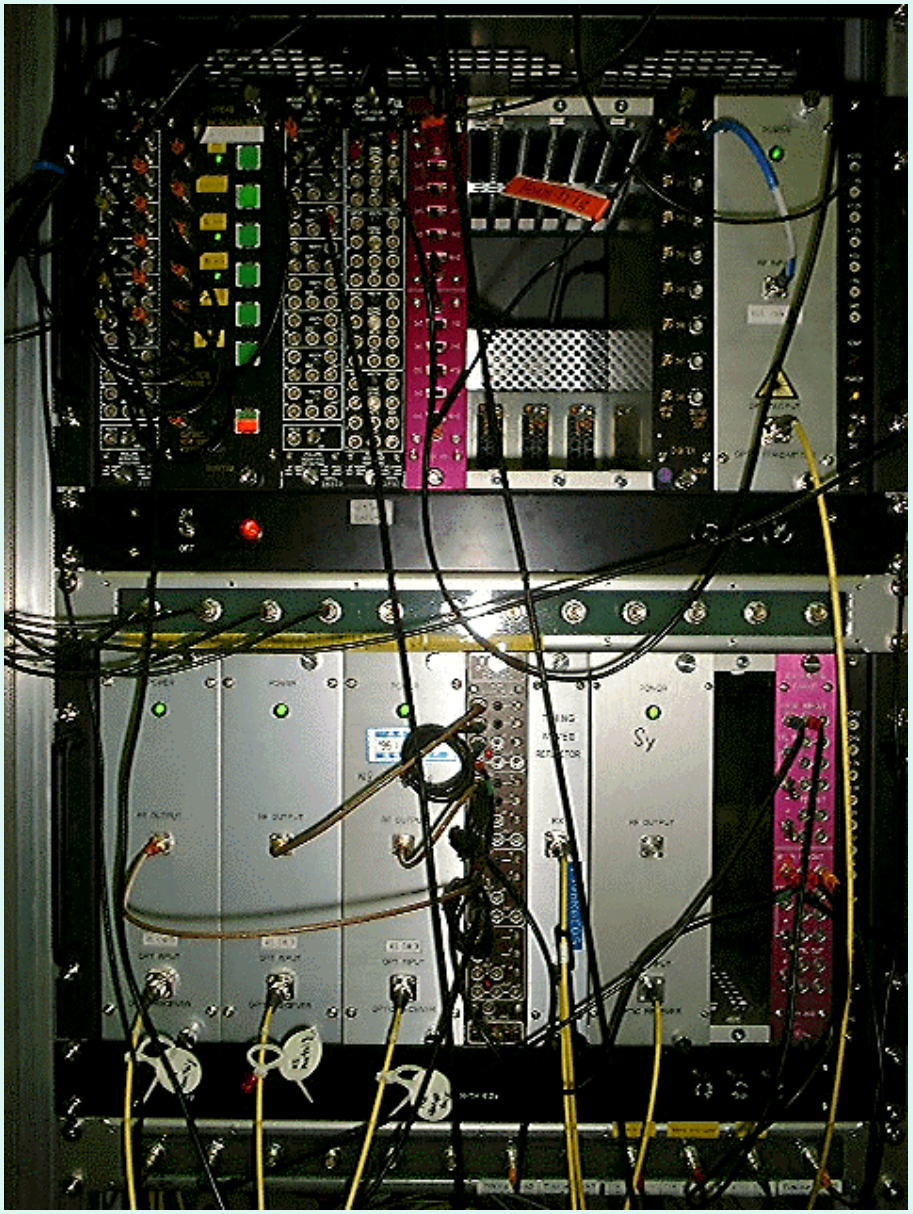

Electronics

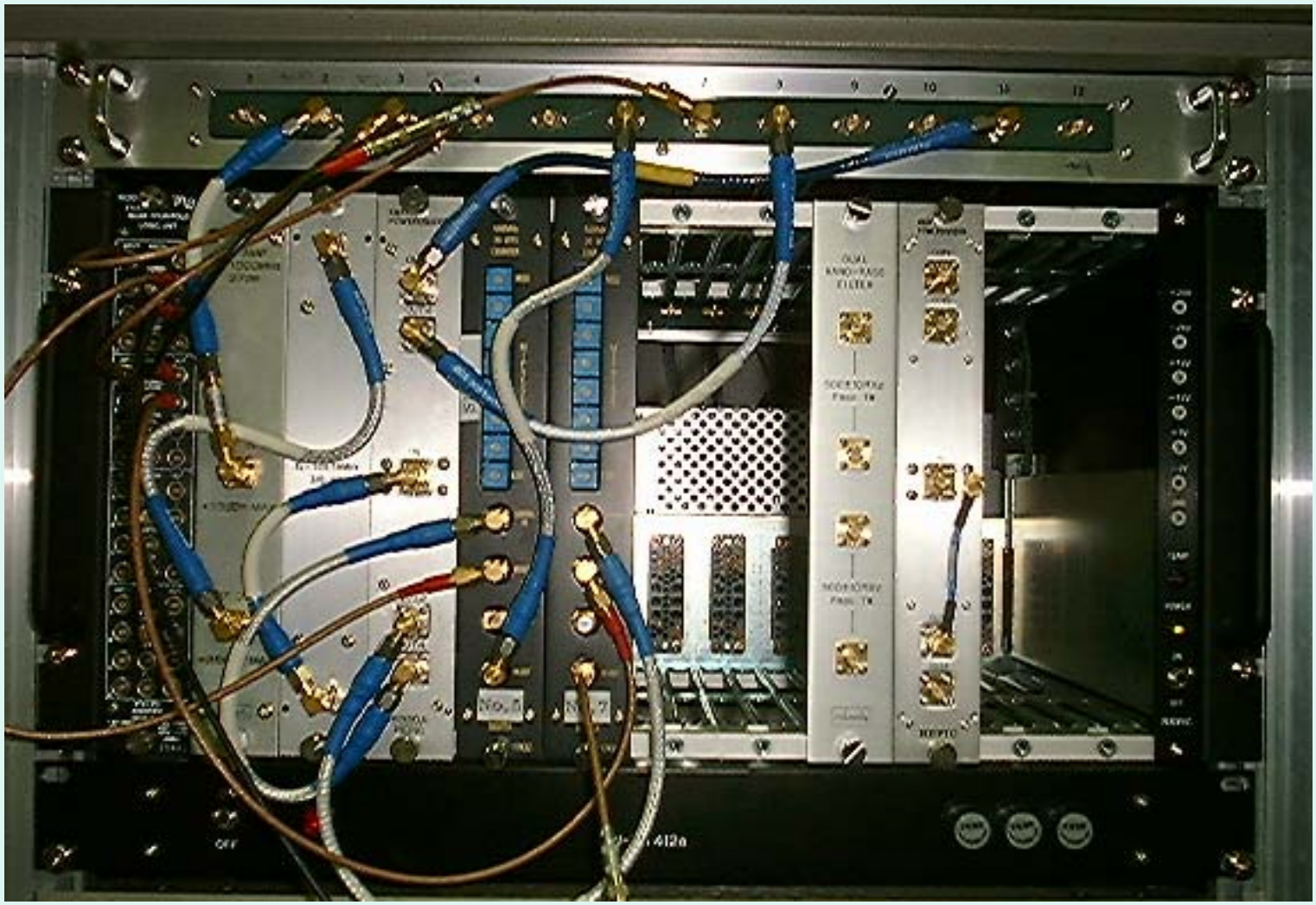

2



3

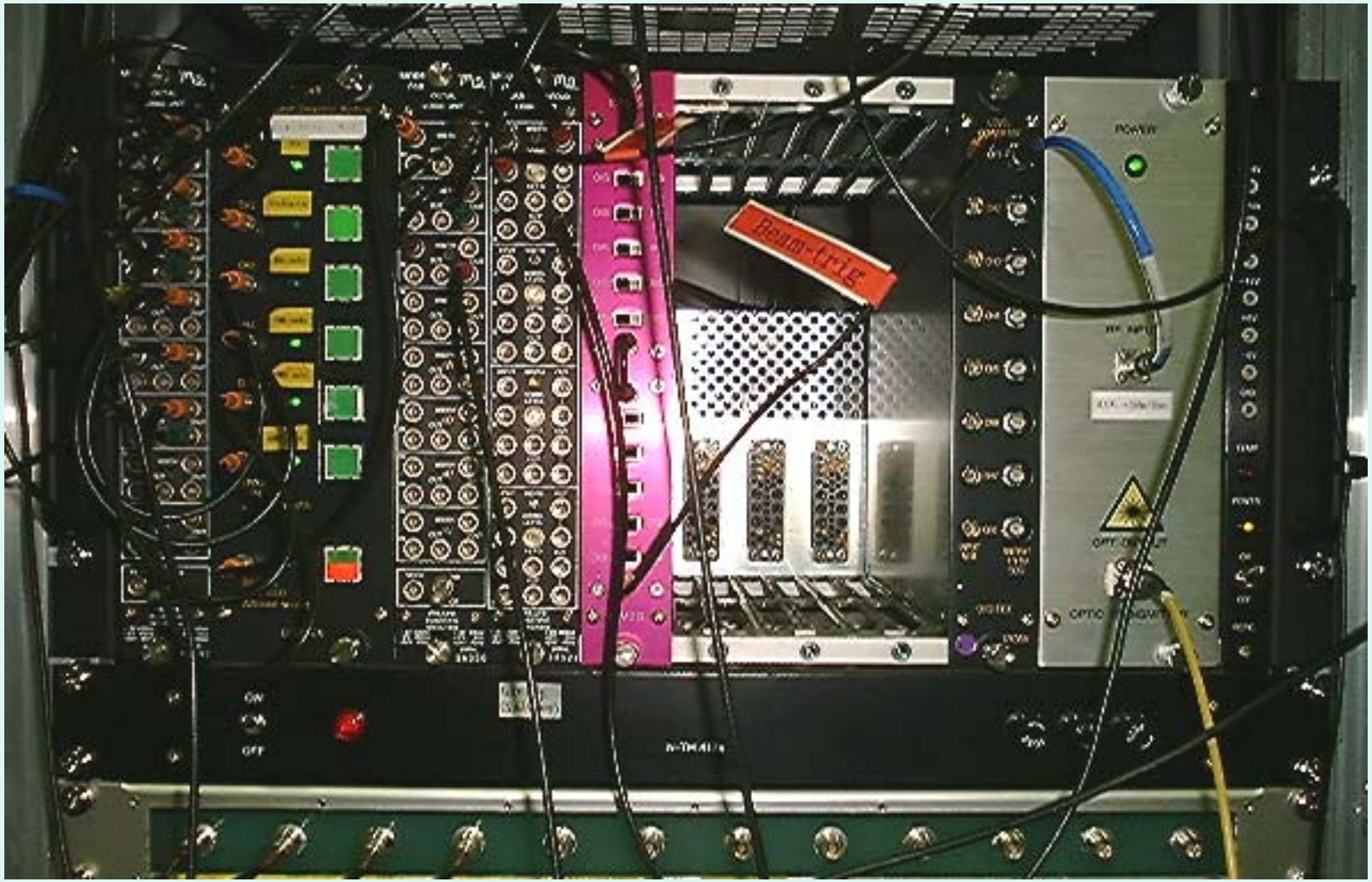

MC10E136

MOTOROLA
SEMICONDUCTOR TECHNICAL DATA

6-Bit Universal Up/Down Counter

MC10E136
MC100E136

6-BIT UNIVERSAL
UP/DOWN COUNTER

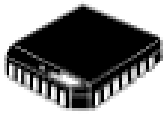

FN SUFFIX
PLASTIC PACKAGE
CASE 776-02

The MC10E/100E136 is a 6-bit synchronous, presettable, cascadable universal counter. The device generates a look-ahead-carry output and accepts a look-ahead-carry input. These two features allow for the cacading of multiple E136's for wider bit width counters that operate at very nearly the same frequency as the stand alone counter.

- 550 MHz Count Frequency
- Fully Synchronous Up and Down Counting
- Internal 75 kΩ Input Pulldown Resistors
- Look-Ahead-Carry Input and Output
- Asynchronous Master Reset
- Extended 100E V_{EE} Range of −4.2 V to −5.46 V

The $\overline{\text{CLOUT}}$ output will pulse LOW for one clock cycle one count before the E136 reaches terminal count. The COUT output will pulse LOW for one clock cycle when the counter reaches terminal count. For more information on utilizing the look-ahead-carry features of the device please refer to the applications section of this data sheet. The differential COUT output facilitates the E136's use in programmable divider and self-stopping counter applications.

Unlike the H136 and other similar universal counter designs the E136 carry out and look-ahead-carry out signals are registered on chip. This design alleviates the glitch problem seen on many counters where the carry out signals are merely gated. Because of this architecture there are some minor functional differences between the E136 and H136 counters. The user, regardless of familiarity with the H136, should read this data sheet carefully. Note specifically (see logic diagram) the operation of the carry out outputs and the look-ahead-carry in input when utilizing the master reset.

When left open all of the input pins will be pulled LOW via an input pulldown resistor. The master reset is an asynchronous signal which when asserted will force the Q outputs LOW.

The Q outputs need not be terminated for the E136 to function properly, in fact if these outputs will not be used in a system it is recommended to save power and minimize noise that they be left open. This practice will minimize switching noise which can reduce the maximum count frequency of the device or significantly reduce margins against other noise in the system.

E136 block diagram

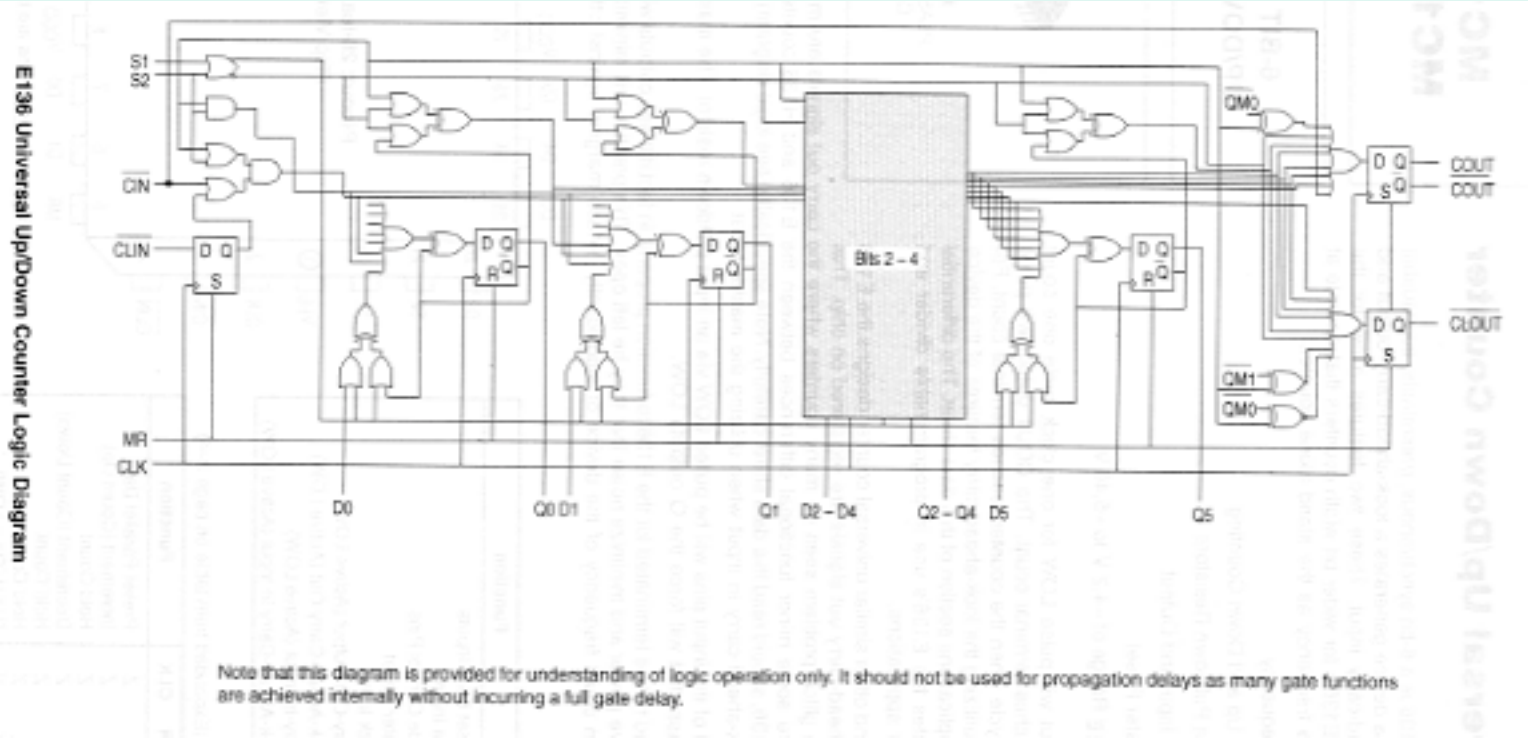

SPring-8 Drawing

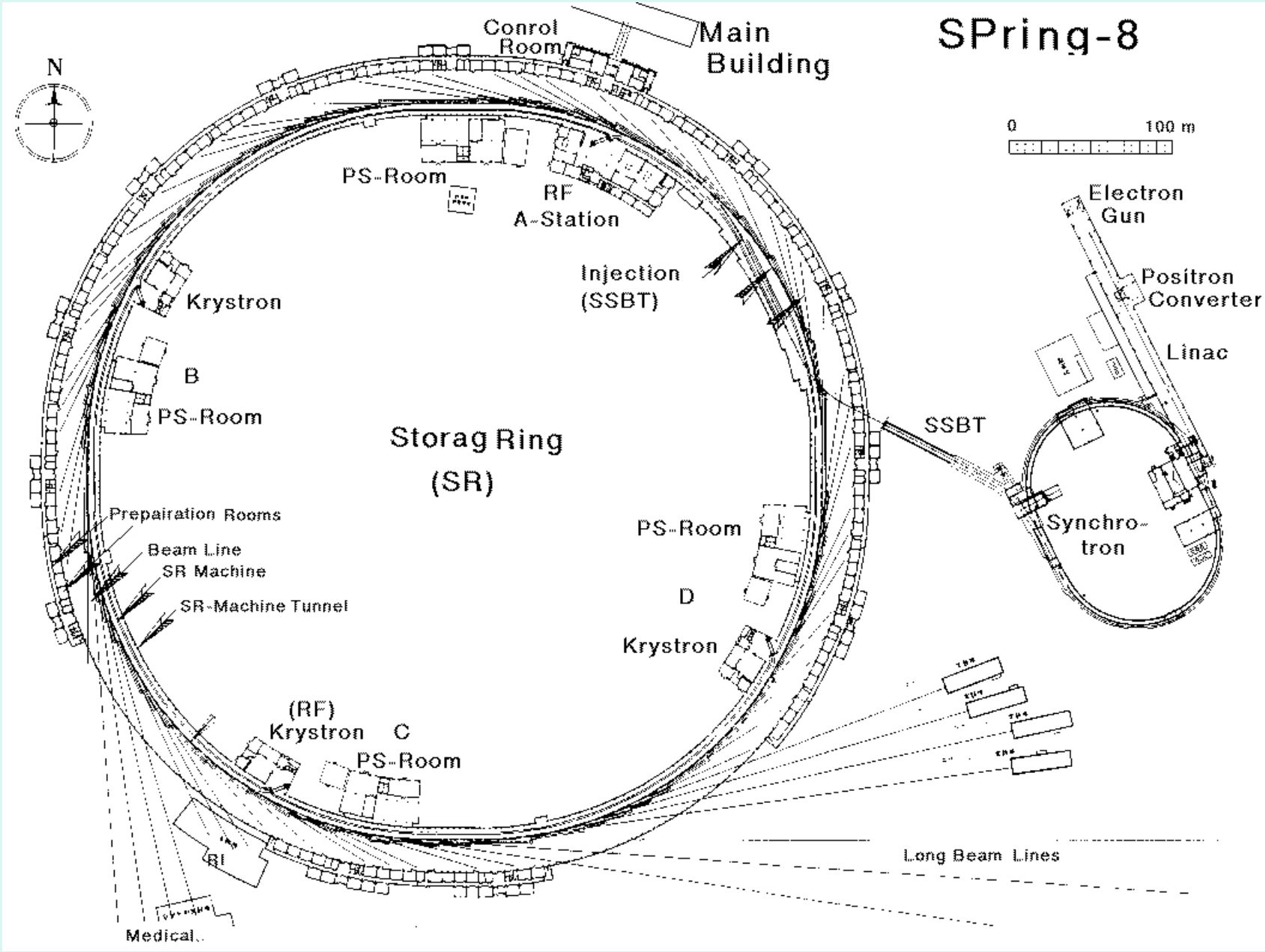

Underground temperature

